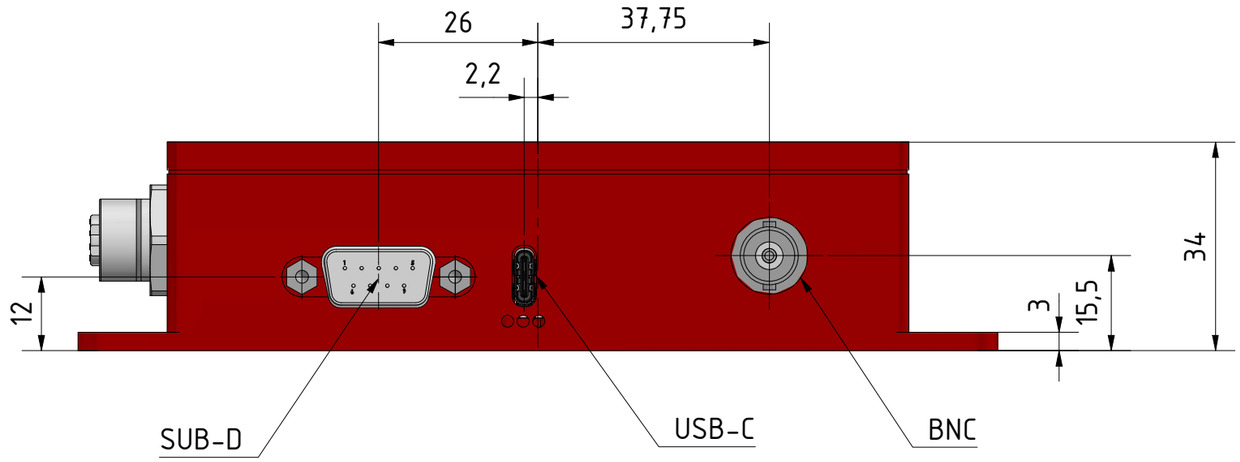


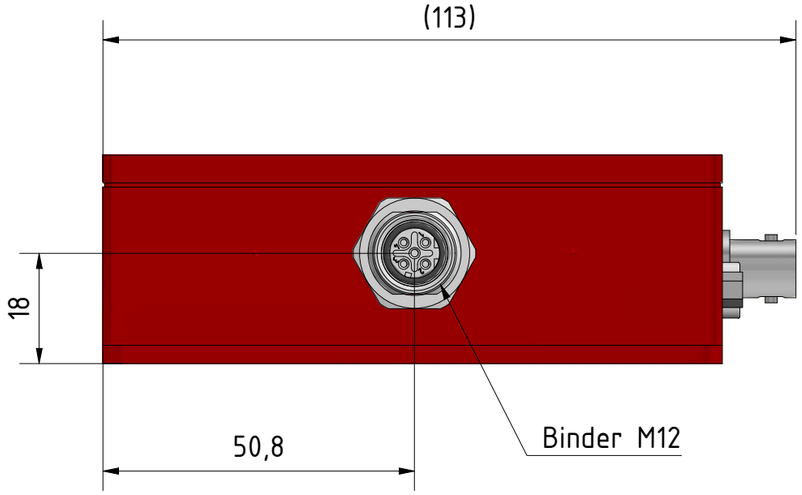


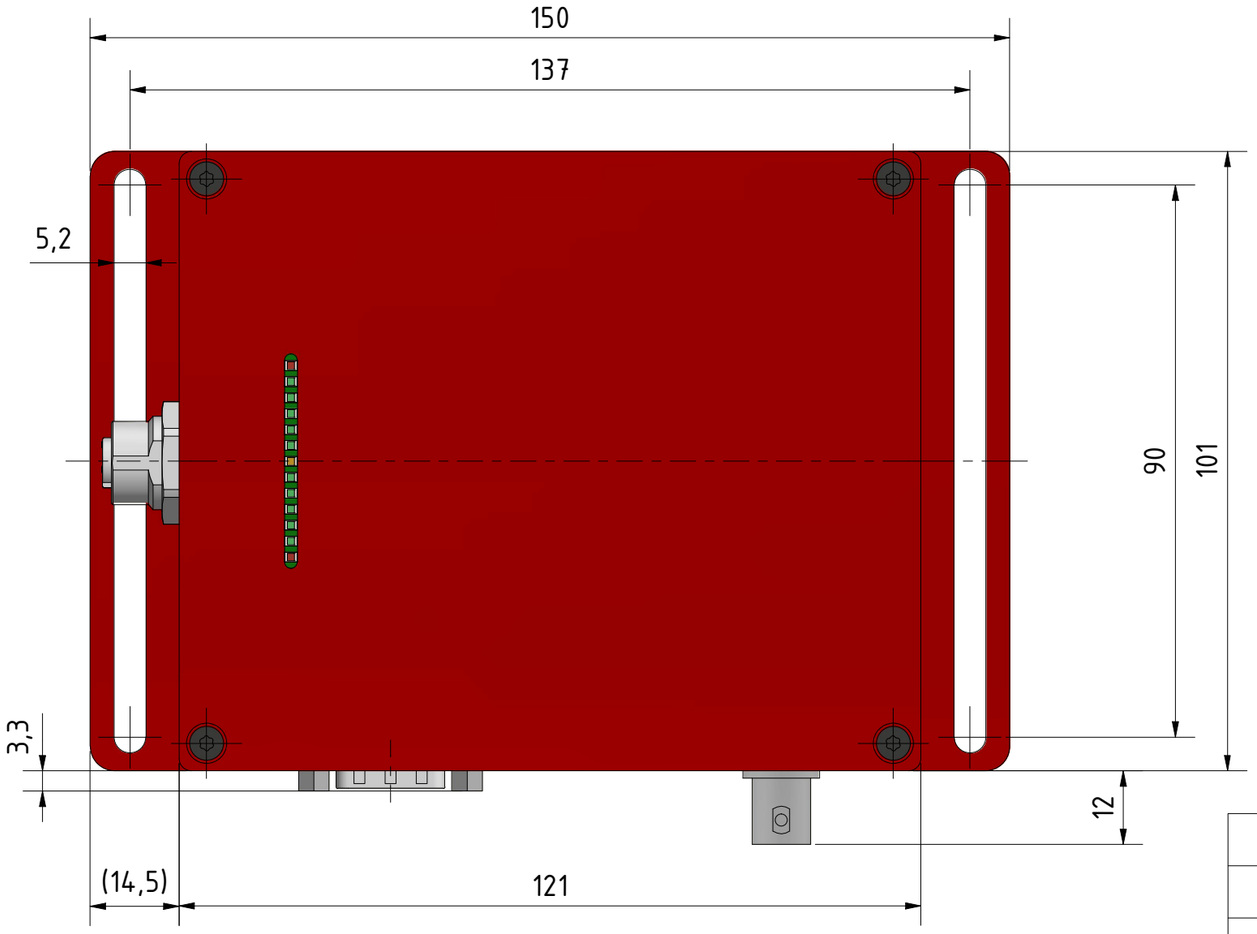

| | | | |
|---|---|---|---|
| General tolerances ISO 2768-mK | | Surface ISO 1302 | |
| Geom. tolerances DIN ISO 1101 | | Edges DIN ISO 13715 | |
| | Date | Name | |
| Drawn | 09.10.2024 | DPapenfuss | |
| Controlled | | | |
| Norm | | | |

Status | Changes | Date | Name

MANNER® SENSORTELEMETRIE
Eschenwasen 20
D-78549 Spaichingen
www.sensortelemetrie.de

Material:

ZSB AW Pn AS M12

500015

1

A3

G:\Bibliotheken\CAD_Daten_MERP\500015\500015_ZSB_AW_Pn_AS_M12.idw