Evaluation Unit (MAW_Fn)

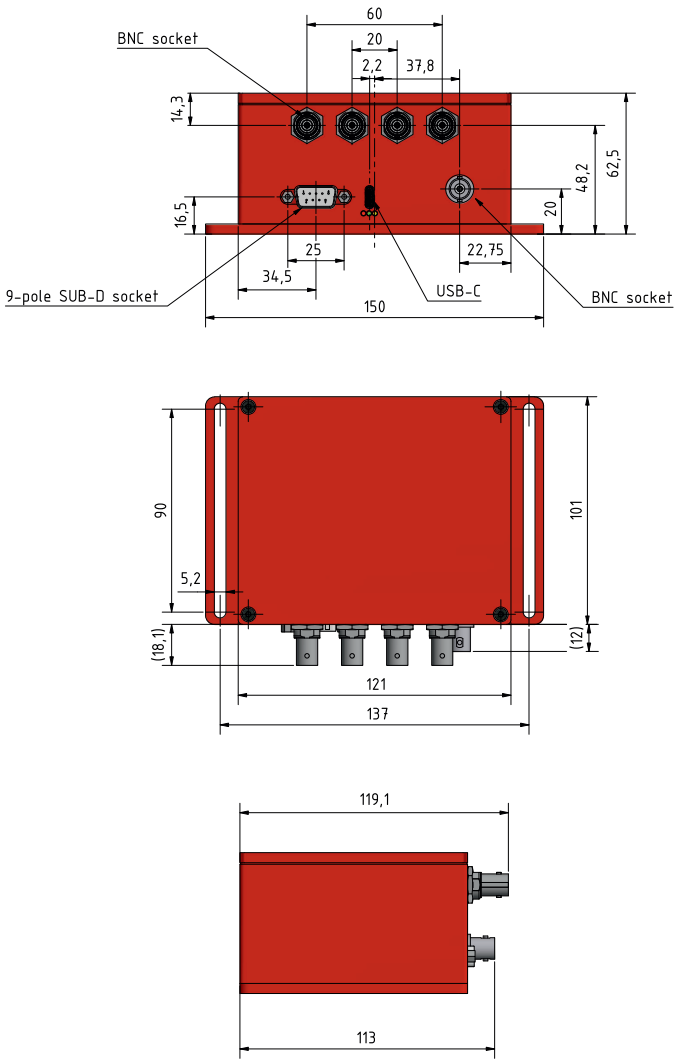

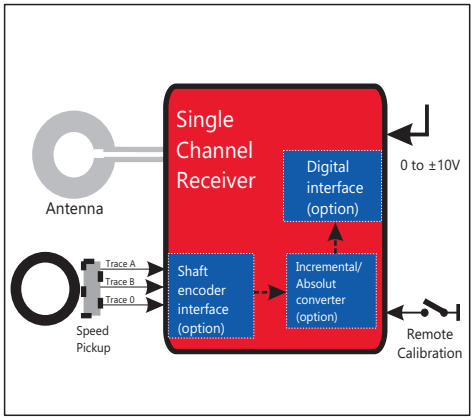

1 to 64 Channel PCM Receiver

Bandwidth: 0 to 1 kHz (10 kHz)
Output Analogue: Voltage; Current; Frequency
Channel count: up to 3 analogue, up to 10.000 samples 16 channels
Digital Outputs: USB, Ethernet, EtherCAT, CAN
RF power: 1 W, 3 W, 5 W
Transmission: inductive sensor telemetry PCM, Wireless
Integrated filter: 10 Hz, 25Hz, 1 khz, 5 khz, 10 khz (others on request)
Resolution: 16 Bits, 24 Bits
Remote shunt calibration: via pin connection or Software/App
Autozero: via magnet switch, or Software/App
Enviromental temperature range: -10 to +70°C (-45 to +85°C)
Supply: 24 (±5%) V DC, 9 to 36 V DC (board supply)

<Sys>	<Freq>	<mod>	<bandw>	<supply>	:RF-power>	<outA>	<Dint>	<Dz>	<temp>	<wa>	<Mo>
-	-	F	1 kHz	24	1W	F	-	-	70	-	-
In	6	PCM12	2 kHz	24B	3W	U	-	Dz	-45/85	IP65	Hu
InBa	3,2	PCM16	5 kHz		5W	I				IP52	Mpl
InBalQ		PCM24	10 kHz				USB				Mpf
							CAN				
Fu							Ethernet				
InFu							EtherCAT				
							WLAN				